JEDEC STANDARD

Lead Integrity

JESD22-B105-C

(Revision of Test Method B105-B)

MAY 2003

JEDEC SOLID STATE TECHNOLOGY ASSOCIATION

JEDEC

EIA
Electronic Industries Alliance

NOTICE

JEDEC standards and publications contain material that has been prepared, reviewed, and approved through the JEDEC Board of Directors level and subsequently reviewed and approved by the JEDEC legal counsel.

JEDEC standards and publications are designed to serve the public interest through eliminating misunderstandings between manufacturers and purchasers, facilitating interchangeability and improvement of products, and assisting the purchaser in selecting and obtaining with minimum delay the proper product for use by those other than JEDEC members, whether the standard is to be used either domestically or internationally.

JEDEC standards and publications are adopted without regard to whether or not their adoption may involve patents or articles, materials, or processes. By such action JEDEC does not assume any liability to any patent owner, nor does it assume any obligation whatever to parties adopting the JEDEC standards or publications.

The information included in JEDEC standards and publications represents a sound approach to product specification and application, principally from the solid state device manufacturer viewpoint.

No claims to be in conformance with this standard may be made unless all requirements stated in the standard are met.

Inquiries, comments, and suggestions relative to the content of this JEDEC standard or publication should be addressed to JEDEC at the address below, or call (703) 907-7559 or www.jedec.org

Published by
©JEDEC Solid State Technology Association 2003
2500 Wilson Boulevard
Arlington, VA 22201-3834

This document may be downloaded free of charge; however JEDEC retains the copyright on this material. By downloading this file the individual agrees not to charge for or resell the resulting material.

PRICE: Please refer to the current
Catalog of JEDEC Engineering Standards and Publications or call Global Engineering Documents, USA and Canada 1-800-854-7179, International (303) 397-7956

Printed in the U.S.A.
All rights reserved

PLEASE!

DON'T VIOLATE
THE
LAW!

This document is copyrighted by JEDEC and may not be
reproduced without permission.

Organizations may obtain permission to reproduce a limited number of copies
through entering into a license agreement. For information, contact:

JEDEC Solid State Technology Association
2500 Wilson Boulevard
Arlington, Virginia 22201-3834
or call (703) 907-7559

TEST METHOD B105-C

LEAD INTEGRITY

(From JEDEC Board Ballot JCB-03-15 formulated under the cognizance of JC-14.1 Committee on Reliability Test Methods for Packaged Devices.)

1 Purpose

This test method provides various tests for determining the integrity lead/package interface and the lead itself when the lead(s) are bent due to faulty board assembly followed by rework of the part for reassembly. For hermetic packages, it is recommended that this test be followed by hermeticity tests in accordance with JESD22A109 (Test Method A109) to determine if there are any adverse effects from the stresses applied to the seals as well as to the leads. These tests, including each of its test conditions, are considered destructive and are only recommended for qualification testing. This test is applicable to all through-hole devices and surface-mount devices requiring lead forming by the user. The following is a summary of the test conditions in this standard;

a) Test Condition A - Tension

This test condition provides for the application of straight tensile loading. See clause 5.

b) Test Condition B - Bending Stress

This test condition provides for the application of bending stresses to determine the integrity of leads, seals and lead plating. See clause 6.

c) Test Condition C - Lead Fatigue

This test condition provides for the application of bending stresses primarily to determine the resistance of the leads to metal fatigue under repeated bending. See clause 7.

d) Test Condition D - Lead Torque

This test condition provides for the application of stresses to the leads to determine the resistance of seals and leads to twisting motions. See clause 8.

e) Test Condition E - Stud Torque

This test condition provides for the application of stresses on a threaded mounting stud caused by tightening the device during mounting. See clause 9.

2 Apparatus

See applicable test condition.

3 General procedure applicable to all test conditions

The device shall be subjected to the stress described in the specified test condition and the specified end point measurements and inspections shall be made except for initial conditioning unless otherwise specified. When possible, the stress shall be applied to randomly selected leads from each device. The same leads shall not be used for more than one test condition.

4 General summary

The following details, and those required by the specific test condition, shall be specified in the applicable procurement document:

a) Test Condition Letter

b) Sample size (combinations of number of leads per device and number of devices) and quality level. The sample size shall not consist of less than 3 devices

5 Test Condition A - Tension

5.1 Purpose

This test is designed to check the capabilities of the device, leads, welds, and seals to withstand a straight pull.

5.2 Apparatus

The tension test requires suitable clamps and fixtures for securing the device and attaching the specified weight without lead restriction. Equivalent linear pull test equipment may be used.

5.3 Procedure

A tension of 8.0 $\pm$ 0.5 oz (227 $\pm$ 14 gram) shall be applied without shock to each lead to be tested in a direction parallel to the axis of the lead or terminal and the tension shall be maintained for 30 seconds minimum. The tension shall be applied as close to the end of the lead as practicable.

5.3 Procedure (cont'd)

5.3.1 Measurements

Hermeticity test on hermetically sealed packages, visual examination and electrical measurements, that consist of parametric and functional tests, shall be taken, as specified in the applicable procurement document.

5.3.2 Failure criteria

After the removal of the stress, examine the device using a magnification between 10X and 20X. Any evidence of breakage, loosening, or relative motion between the lead and the device body shall be considered a device failure. When hermeticity tests are conducted (in accordance with Test Method A109) as a post measurement, meniscus cracks shall not be a cause for rejection of the devices, which have passed the tests. Failure of any specified post electrical measurement shall be considered a cause for failure.

5.4 Summary

The following details shall be specified in the applicable procurement documents:

a) Weight to be attached to lead, if other than 8.0 ± 0.5 oz (227 ± 14 gram).

b) Length of time weight is to be attached, if other than 30 seconds.

c) Failure criteria, if other than specified.

6 Test Condition B - Bending Stress

6.1 Purpose

This test is designed to check the capability of the leads, lead finish, lead welds and seals of the devices to withstand stresses to the leads and seals which might reasonably be expected to occur from actual handling and assembly of the devices in application.

6.2 Apparatus

The bending test requires attaching devices, clamps, supports or other suitable hardware, necessary to apply the bending stress through the specified bend angle.

6.3 Procedure

Each lead of the sample shall be subjected to a force sufficient to bend the lead as specified in paragraphs 6.3.1 through 6.3.6, as applicable. Any number, or all of the leads of the test device, may be bent simultaneously. Rows of leads may be bent one row at a time. Each lead shall be bent through one cycle as follows:

Bend through the specified arc in one direction and return to the original position. All arcs shall be made in the same plane, without lead restriction.

6.3.1 Direction of bends

Test leads shall be bent in the least rigid direction. If there is no least rigid direction, the leads may be bent in any direction. No lead shall be bent so as to interfere with another lead. If interference is unavoidable, the test lead shall be bent in the opposite direction to the angle specified and returned to its normal position.

6.3.2 Procedure for initial conditioning for environmental test

When normally straight leads are supplied in a formed condition (including the staggered lead dual-in-line configuration), the lead forming operation shall be considered acceptable initial conditioning in place of that specified, providing the lead forming has been performed after lead plating and the forming is at least as severe in permanent lead deformation as the specified bending.

6.3.3 Procedure for flat-packs and axial lead metal-can devices (e.g., flexible and semi-flexible leads)

6.3.3.1 Flexible leads

A lead shall be considered flexible if its section modulus (in the least rigid direction) is less than or equal to that of a rectangular lead with a cross section of 0.006 x 0.020 inch (0.15 x 0.51 mm). Round leads ≥ 0.020 inch (0.51 mm) in diameter shall be considered flexible. Flexible leads shall be bent through an arc of at least 45° (see Figure 1), measured at a distance 0.12 ± 0.03 inch (3.05 ± 0.76 mm) along the lead from the seal unless otherwise specified.

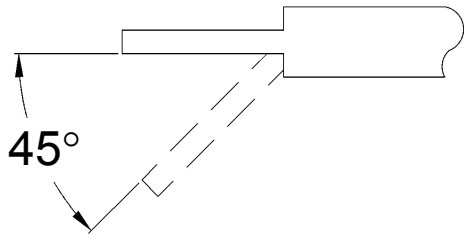

Figure 1 — Flexible lead bend

6.3.3 Procedure for flat-packs and axial lead metal-can devices (e.g., flexible and semi-flexible leads) (cont'd)

6.3.3.2 Semi-flexible leads

Semi-flexible leads are those leads with a section modulus (in the least rigid direction) greater than that of a rectangular lead with a cross section of 0.006 x 0.020 inch (0.15 x 0.51 mm), which is intended to be bent during insertion or other application. Round leads greater than 0.020 inch (0.51 mm) in diameter shall be considered semi-flexible. Semi-flexible leads shall be bent through an arc of a least 30° (see Figure 2), measured at the lead extremities, unless otherwise specified.

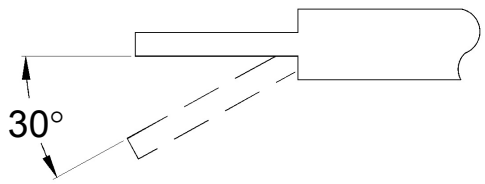

6.3.4 Procedure for dual-in-line through hole package leads

Dual-in-line package leads are leads with more than one section modulus, and with leads normally aligned in parallel at 90° angle from the bottom of the package during insertion. Dual-in-line package leads shall be bent inward through an angle sufficient to cause the lead to retain a permanent bend (i.e., after stress removal) of at least 15°, measured at the lead extremities about the first bend. For packages that have the shoulder restrained (see configuration 1-3 of Figure 3), the angle of the bend shall be measured from the seating plane to the lead extremities. At the completion of the initial bend, the leads shall be returned to their approximate original position.

6.3.4 Procedure for dual-in-line through hole package leads (cont'd)

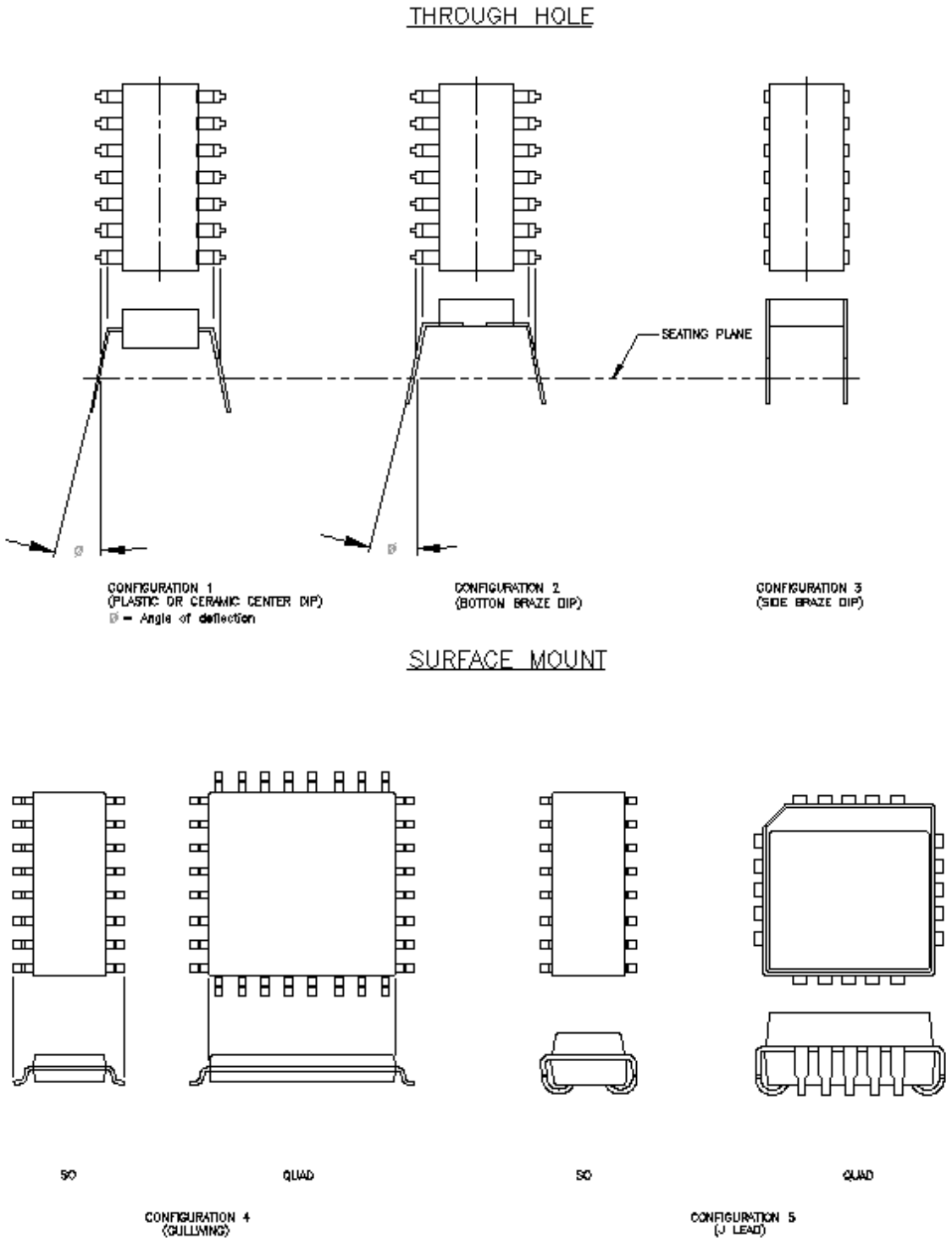

Figure 3 — Package configurations

6.3.5 Procedure for small outlines (SO) and quad fine pitch (QFP) gull wing formed packages

6.3.5.1 Small outline (SO) and quad fine pitch (QFP) packages

Small Outline (SO) Packages shall have leads bent outward at 15°, then inward 30°, then returned to the original position (see Figure 4).

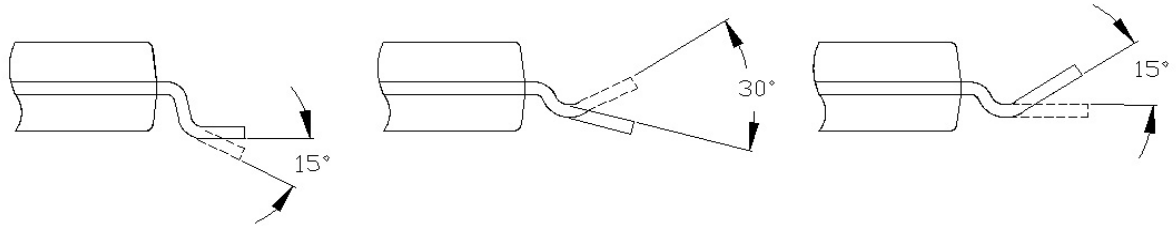

Figure 4 — SO and QFP lead bend

6.3.6 Procedure for "J" leaded SO and chip carrier (LCC) packages

6.3.6.1 Leads

The leads to be tested shall be selected at random from each package in the test sample. Leads from two adjacent sides shall be sampled from each part. Prepare and test only one row of leads at a time.

6.3.6.2 Straightening "J" leads

1) Mount the device in a fixture equivalent to Figure 6.

2) Use suitable tweezers to straighten the lead below the lead shoulder and transition region (see Figure 5).

3) Carefully straighten the "J" bend portion of the LCC package leads to position approximately perpendicular to the widest dimension.

4) Great care must be taken to prevent damage to the lead, such as nicks, kinks, or deep scratches.

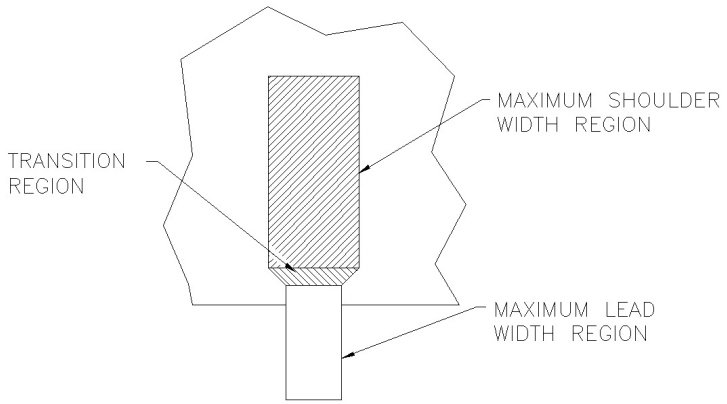

Figure 5 — "J" Lead Contour

6.3.6 Procedure for "J" leaded SO and chip carrier (LCC) packages (cont'd)

6.3.6.3 Lead inspection

Inspect each lead before and after straightening using a low power optical microscope between 10X and 20X magnification. Do not test any leads damaged by the straightening operation.

6.3.6.4 Mounting LCC package

Mount the LCC package in a lead bend test fixture using necessary spacers, with the leads to be tested pointing straight down, i.e., at a 90° angle or normal to the bottom of the package.

6.3.6.5 Test

Test in accordance with 6.3.4 except that the direction of bend shall be outward from the package (see Figure 6).

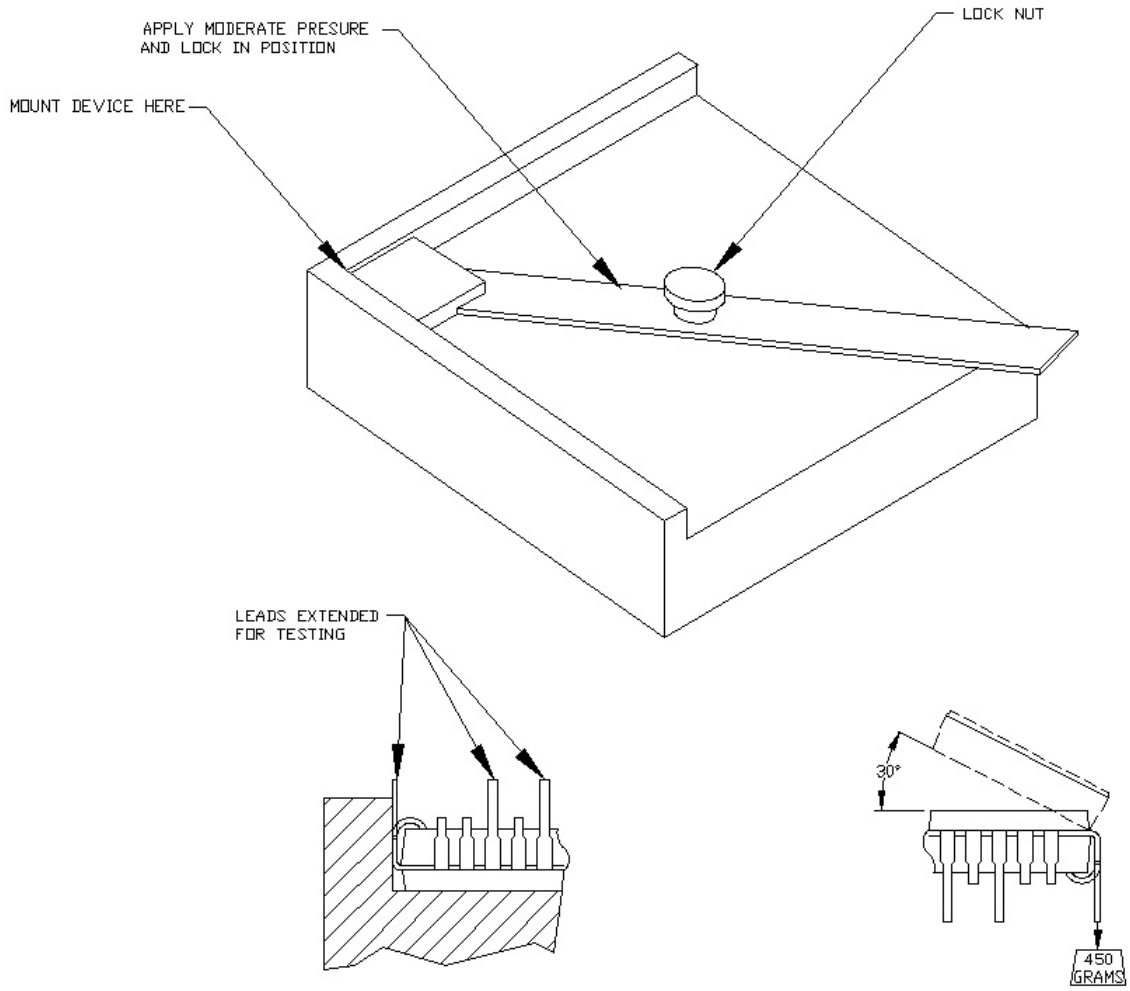

Figure 6 — Holding fixture for straightening and lead bend for "J" lead configurations

6.3.6 Procedure for "J" leaded SO and chip carrier (LCC) packages (cont'd)

6.3.6.6 Rotating package body

Select another untested lead and attach a 16 ± 0.5 oz (454 ± 14 gram) weight below the standoff (neck down) portion of the straightened lead. Care should be taken as to not twist or otherwise bend the lead under test or adjacent leads. Rotate the package body through a 30° arc and return to its original position. This completes one cycle and should take 2 - 5 seconds. The rotation of the part must be done such as to avoid swinging or twisting motions of the weight.

6.3.7 Measurements

Hermeticity tests on hermetically sealed packages, visual examination and electrical measurements shall be taken as specified in the applicable procurement document.

6.3.8 Failure criteria

After removal of the stress, examine the device using magnification between 10X and 20X. Any evidence of breakage, loosening or relative motion between the terminal lead and the device body shall be considered a device failure. Devices that failed at post test measurement, when specified, shall also be considered to have failed.

6.3.8.1 LCC and SO package bend

For the LCC package bend, failure criteria over the entire lead is applicable to paragraph 6.3.6.5 and restricted to maximum width region for the conditions described in paragraph 6.3.6.6.

6.4 Summary

The following details shall be specified in the applicable procurement document:

a) Bending arc, if other than specified.

b) Failure criteria, if other than specified.

7 Test Condition C - Lead Fatigue

7.1 Purpose

This test is designed to check the resistance of the leads to metal fatigue.

7.2 Apparatus

The lead fatigue stress requires attaching devices, clamps, supports or other suitable hardware necessary to apply a repeated bending stress through the specified bend angle.

7.3 Procedure

The following weights will be used depending on the leads section modulus:

1) >0.006 x 0.020 inch (0.15 x 0.51 mm), or round lead with a cross section of >0.020 inch (0.051 mm) in diameter a weight of 8.0 ± 0.5 oz (227 ± 14 gram) shall be used.

2) >0.004 x 0.010 inch (0.10 x 0.25 mm) but ≤ 0.006 x 0.020 inch (0.15 x 0.51 mm), or round lead with a cross section of >0.010 inch (0.025 mm) but ≤0.020 inch (0.051 mm) in diameter a weight of 3.0 ± .3 oz (85 ± 9 gram) shall be used.

3) ≤0.004 x 0.010 inch (0.10 x 0.25 mm), or round lead with a cross section of ≤0.010 inch (0.025 mm) in diameter a weight of 1.5 ± .1 oz (42.5 ± 3 gram) shall be used. The appropriate procedures of 7.3.2, 7.3.3, 7.3.4, or 7.3.5 for the package under test shall be used. Three bending cycles shall be performed, unless otherwise specified, (see paragraph 7.4 b).

7.3.1 Direction of bends

The test leads shall be bent in the least rigid direction. If there is no least rigid direction, they may be bent in any direction. No leads shall be bent so as to interfere with another lead. If interference is unavoidable, the test lead shall be bent in the opposite direction to the angle specified and returned to its normal position.

7.3.2 Procedure for flexible and semi-flexible leads (e.g., dual in line flat packs, quad packages and axial-lead metal-can devices)

A weight specified by the lead section modulus, shall be applied to each lead to be tested for three 90 ± 5° arcs of the case. An arc is defined as the movement of the case without torsion, to a position perpendicular to the pull axis and return to normal. All arcs on a single lead shall be made in the same direction and in the same plane without lead restriction. A bending cycle shall be completed in 2 - 5 seconds. For devices with rectangular or ribbon leads, the plane of the arcs shall be perpendicular to the flat plane of the lead. The test shall not be applied to end leads of packages where its application will apply primarily torsion forces at the lead seal.

7.3.3 Procedure for dual-in-line through hole packages

Dual-in-line packages shall be subjected to three cycles in accordance with 6.3.4 and the weight specified will be determined by the lead section modulus.

7.3.4 Procedure for small outline (SO) and quad flat pack (QFP) gull wing formed packages

Small Outline (SO) and Quad Flat Pack (QFP) packages shall be subjected to three cycles in accordance with 6.3.5 and the weight specified will be determined by the lead section modulus.

7.3.5 Procedure for "J" leaded SO and chip carrier (LCC) packages

Prepare leads in accordance with 6.3.6.1 - 6.3.6.4 and the weight specified will be determined by the lead section modulus.

Test in accordance with 6.3.6.5 except that the number of cycles shall be 3.

Test in accordance with 6.3.6.6 except that the number of cycles shall be 3.

7.3.6 Measurements

Hermeticity tests will be preformed on hermetically sealed packages. Visual examination and electrical measurements shall be taken if specified in the applicable procurement document.

7.3.7 Failure criteria

After removal of the stress, examine the device using magnification between 10X and 20X. Any evidence of lead fracture shall be considered a device failure.

For the LCC package only, lead bend per 6.3.6.5, failure criteria are to be applied only to the transition region from maximum width to minimum width.

For LCC package bend only, failure criteria over the entire lead are applicable to 6.3.6.5 and restricted to maximum width region described in 6.3.6.6.

7.4 Summary

The following details shall be specified in the applicable procurement document:

a) Force to be applied to the lead, if other than stated in the standard.

b) Number of cycles, if other than stated in the standard.

c) Bend angle, if other than stated in the standard

d) Failure criteria, if other than stated in the standard

8 Test Condition D - Lead Torque

8.1 Purpose

This test is designed to check device leads and seals for their resistance to twisting motions.

8.2 Apparatus

The torque test requires suitable clamps and fixtures, and a torsion wrench or other suitable method of applying the specified torque without lead restriction.

8.3 Procedure

The appropriate procedure of 8.3.1 or 8.3.2 for the device under test shall be used.

8.3.1 Procedure for devices with circular cross section terminals or leads

The device will be rigidly held with a suitable fixture and the specified torque shall be applied without shock for 15 seconds minimum to the lead to be tested, about the axis of the lead. The torque shall be applied between the lead or terminal and the case in a direction, which tends to cause loosening of the lead.

8.3.1.1 UHF and microwave diodes

Unless otherwise specified, a torque of 1.5 1b-inches (17.32 kg-mm) about the diode axis shall be applied for the specified time, without shock, between the terminals and in a direction, which tends to cause loosening of the terminals. The manufacturer's recommendation shall be followed in the method of clamping.

8.3.2 Procedure for Devices with Rectangular Cross Section Leads

The device shall be rigidly held and a torque of 2.0 $\pm$ 0.2 oz-inch (1.45 $\pm$0.145 kg-mm), unless otherwise specified, shall be applied to the lead at a distance of 0.12 $\pm$ 0.03 inch (3.05 $\pm$ 0.76 mm) from the device body or at the end of the lead, if it is shorter that 0.12 inch (3.05 mm). The torque shall be applied about the axis of the lead, once in each direction (clockwise and counter-clockwise). When devices have leads, which are formed close to the body, the torque may be applied 0.12 $\pm$ 0.03 oz (3.05 $\pm$ 0.76 mm) from the form. For device leads that twist noticeably, when less than the specified torque is applied, the twist shall be continued until the twist angle reaches 30 $\pm$ 10° or the specified torque is achieved, whichever condition occurs first. The lead shall then be restored to its original position.

8.3.3 Measurements

Hermeticity tests on hermetically sealed packages, visual examination and electrical measurements shall be taken as specified in the applicable procurement document.

8.3.4 Failure Criteria

After removal of the stress, examine the device using magnification between 10X and 20X. Any evidence of breakage, loosening or relative motion between the terminal and the device body shall be considered a device failure. When a post measurement hermeticity test is conducted in accordance with Method A109, meniscus cracks shall not be cause for rejection of devices that pass the hermeticity test. Failure of any specified post electrical measurement shall be considered cause for rejection.

8.4 Summary

The following details shall be specified in the applicable procurement document:

a) Torque to be applied for circular cross section leads, see 8.3.1.

b) Duration of torque application for circular cross sections leads, if other than 15 seconds minimum, see 8.3.1.

c) Torque to be applied for rectangular cross section leads, if other than 2.0 ± 0.2 oz-inch (1.45 ± 0.14 kg-mm), see 8.3.2.

d) Electrical measurements.

9 Test Condition E - Stud Torque

9.1 Purpose

This test is designed to check the resistance of a device, with threaded mounting stud, to the tightening of the device caused during mounting.

9.2 Apparatus

The torque test requires suitable clamps and fixtures and a torsion wrench or suitable method of applying the specified torque.

9.3 Procedure

The device shall be clamped by its body or flange. A flat steel washer, of a thickness equal to six threaded pitches of the stud being tested, and a new Class 2 fit steel nut, shall be assembled, in that order, on the stud, with all parts clean and dry. The specified torque shall be applied, without shock, to the nut for the specified period of time. The nut and washer shall then be disassembled from the device and the device shall then be examined for compliance with the requirements.

9.3.1 Measurements

Hermeticity tests on hermetically sealed packages, visual examination, and electrical measurements shall be taken as specified in the applicable procurement document.

9.3.2 Failure criteria

A device shall be defined as a failure if hermeticity cannot be demonstrated, if parametric limits are exceeded, or if functionality cannot be demonstrated under nominal and worst-case conditions, specified in the applicable procurement document. Mechanical damage, such as the stud breaking or elongation greater than half of the thread pitch, evidence of thread stripping or deformation of the mounting seat, cracking, chipping, or breaking of the package will also be considered a failure, provided such damage was not caused by fixturing.

9.4 Summary

The following details shall be specified in the applicable procurement document:

a) The amount of torque to be applied, see 9.3.

b) Length of time torque to be applied, see 9.3.

c) Measurements to be made after the test see 9.3.

Standard Improvement Form

JESD22-B105C

The purpose of this form is to provide the Technical Committees of JEDEC with input from the industry regarding usage of the subject standard. Individuals or companies are invited to submit comments to JEDEC. All comments will be collected and dispersed to the appropriate committee(s).

If you can provide input, please complete this form and return to:

JEDEC
Attn: Publications Department
2500 Wilson Blvd. Suite 220
Arlington, VA 22201-3834

OR Fax: 703.907.7583

1. I recommend changes to the following:

   ☐ Requirement, paragraph number _____

   ☐ Test method number _____ Paragraph number _____

   The referenced paragraph number has proven to be:

   ☐ Unclear ☐ Too Rigid ☐ In Error

   ☐ Other _____

2. Recommendations for correction:

   _____

   _____

   _____

   _____

3. Other suggestions for document improvement:

   _____

   _____

   _____

   _____

Submitted by

Name: _____ Phone: _____

Company: _____ E-mail: _____

Address: _____

City/State/Zip: _____ Date: _____

JEDEC